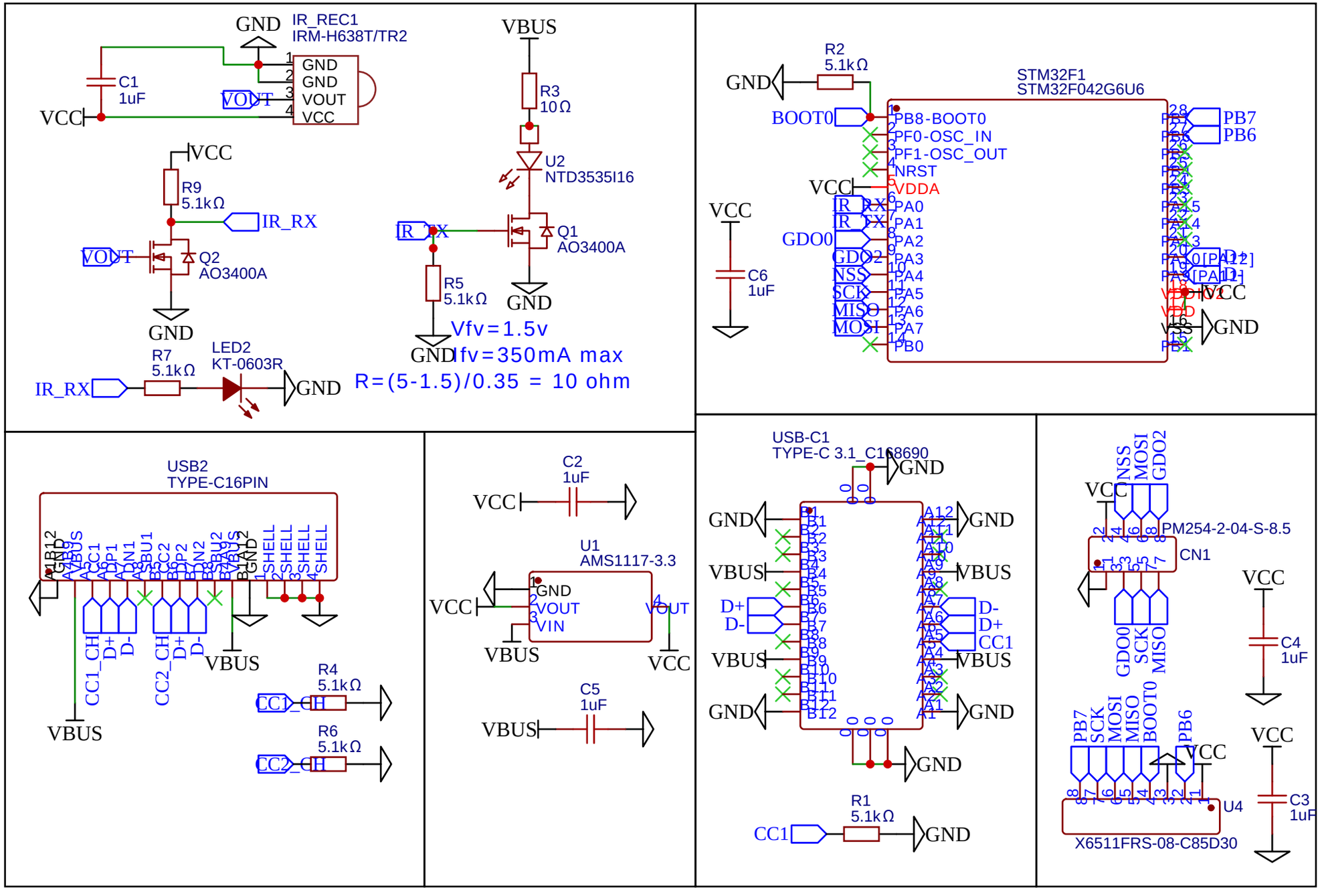


| | | |
|---|---|---|
| TITLE: EMWAVER CORE | | REV: 1.0 |
| EasyEDA | Company: Continual MI | Sheet: 1/1 |
| | Date: 2026-03-10 Drawn By: Lu í s Marnoto | |