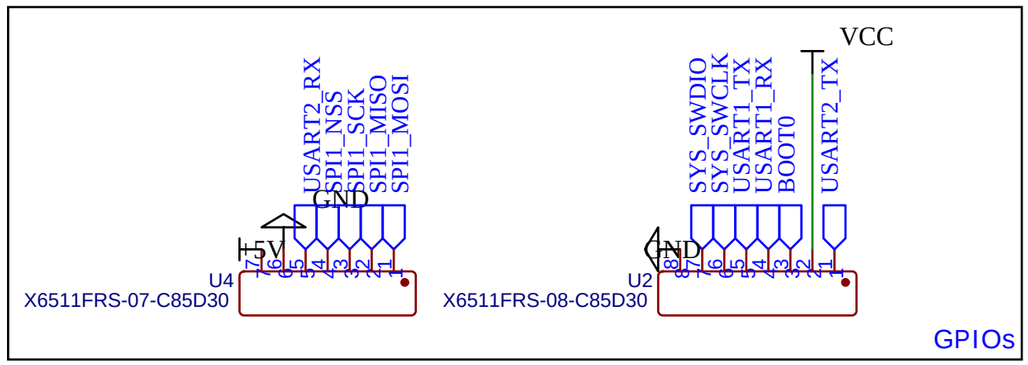

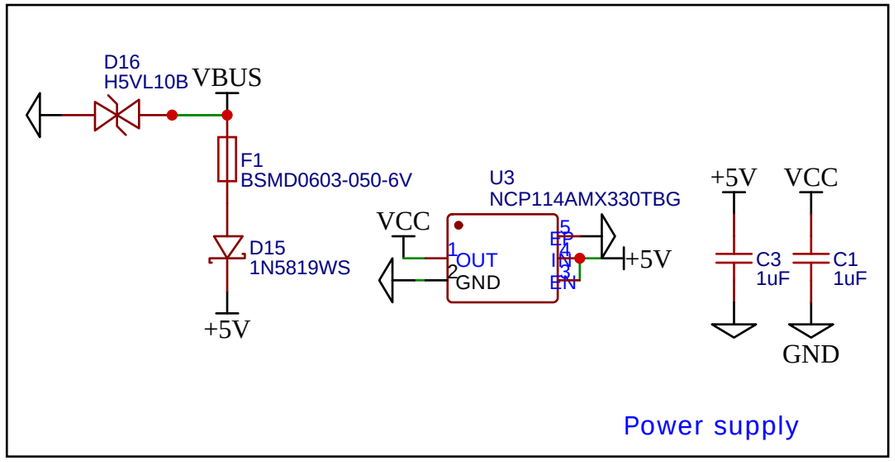

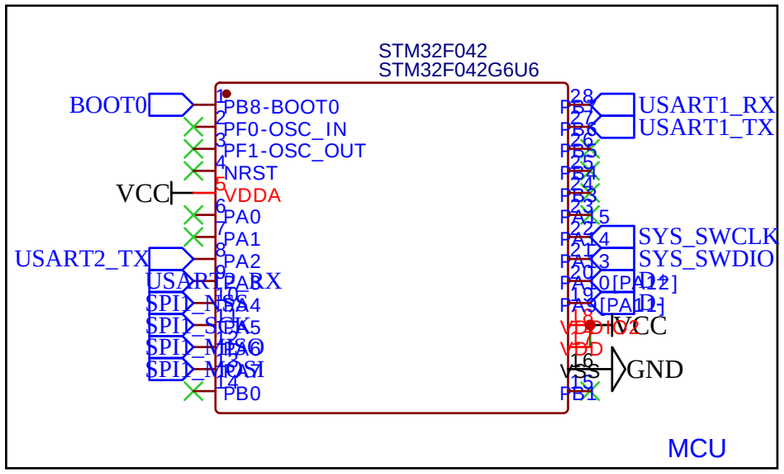

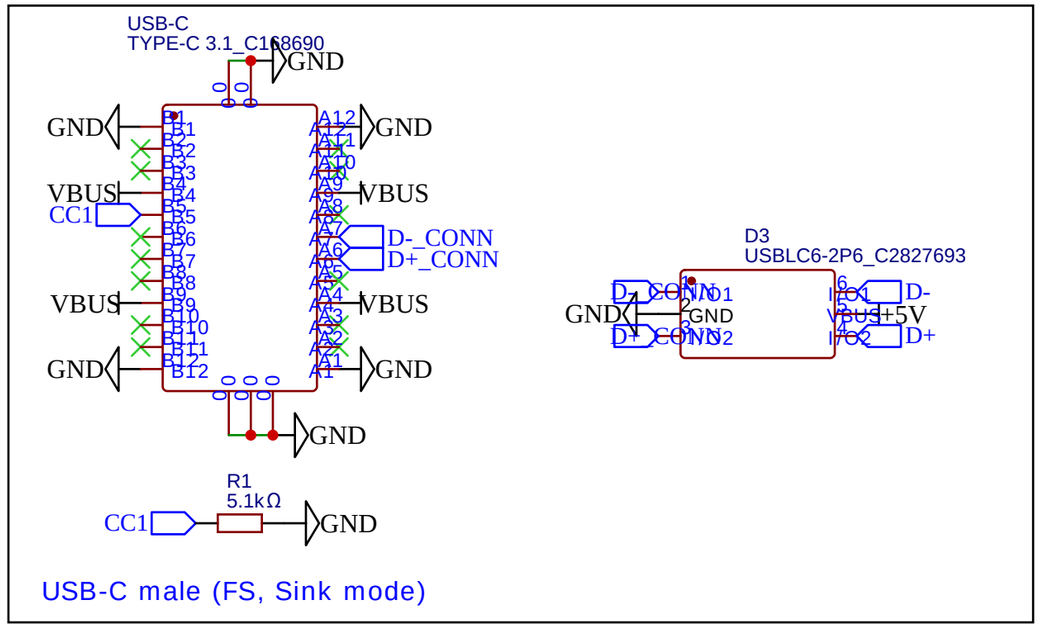

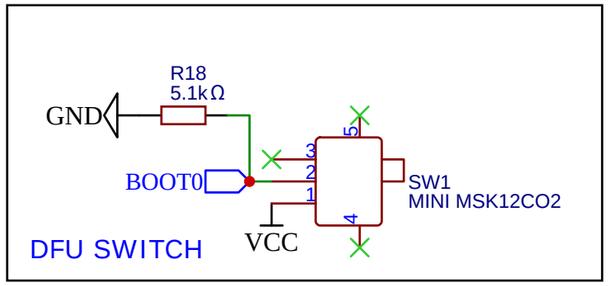

TITLE: GPIO_WAVER		REV: 1.0
EasyEDA	Company: Continual MI	Sheet: 1/1
	Date: 2022-12-25	Drawn By: Lu í s Marnoto