CC1101_433
300 ~ 348 MHz, 387 ~ 464 MHz, 779 ~ 928 MHz

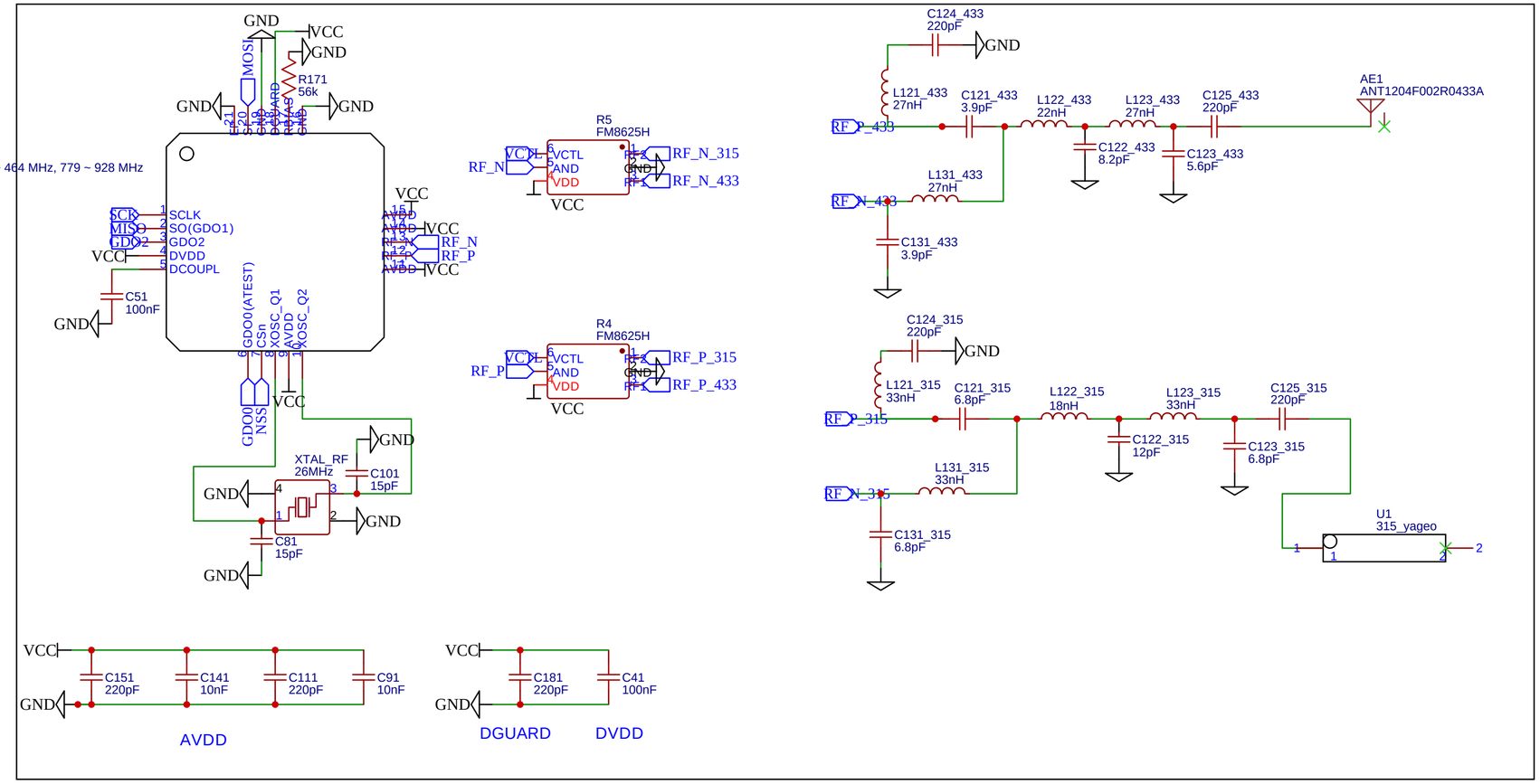

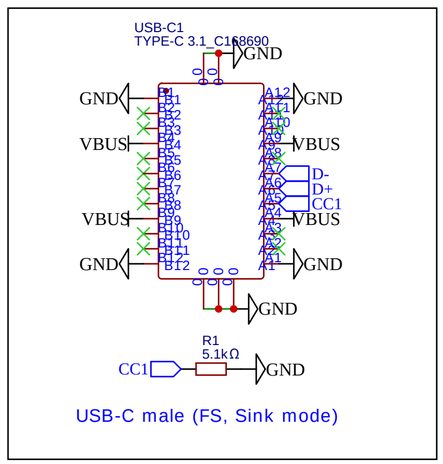

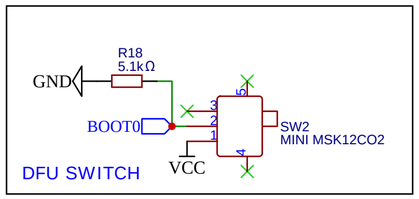

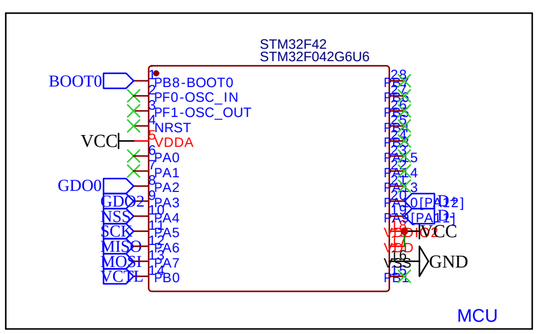

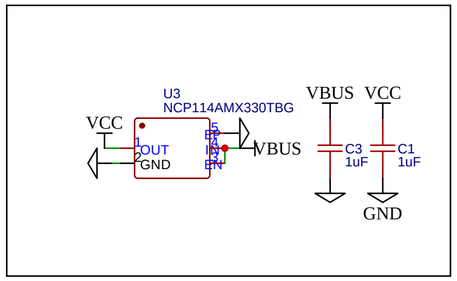

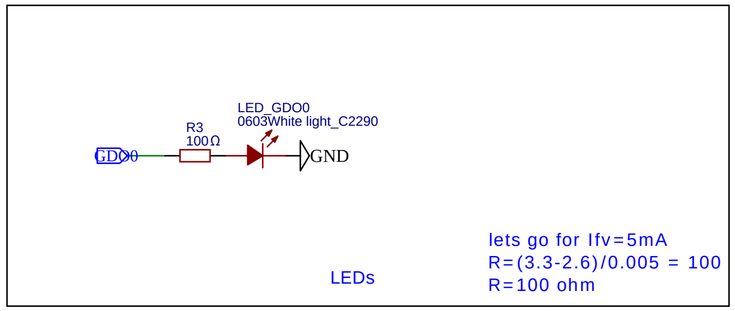

TITLE: ISM WAVER		REV: 1.0
EasyEDA	Company: Continual MI	Sheet: 1/1
	Date: 2024-08-24 Drawn By: Lu í s Marnoto	